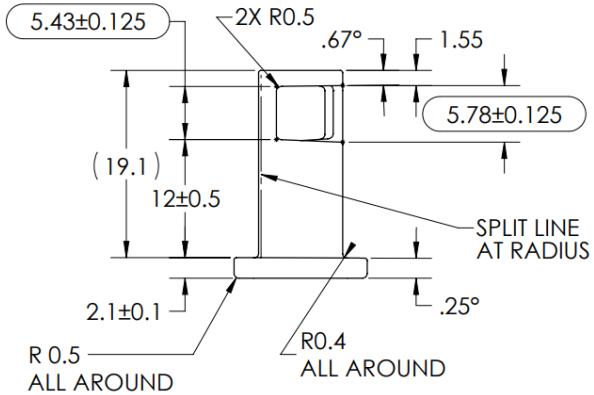

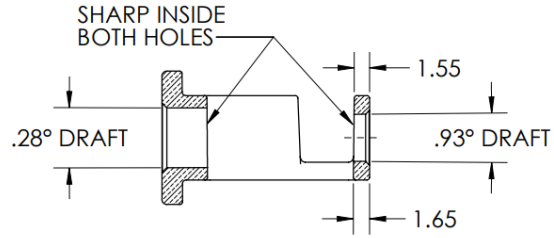

SECTION Y-Y

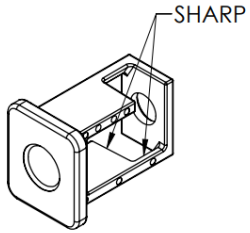

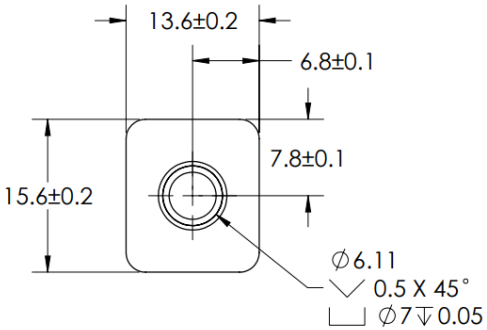

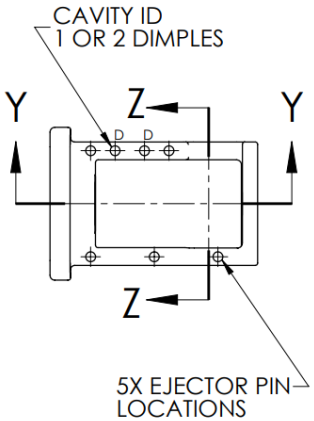

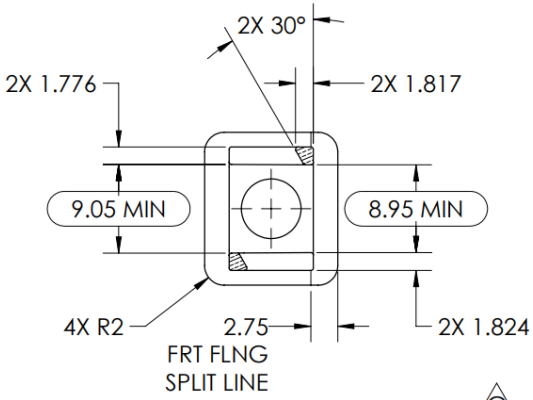

SECTION Z-Z

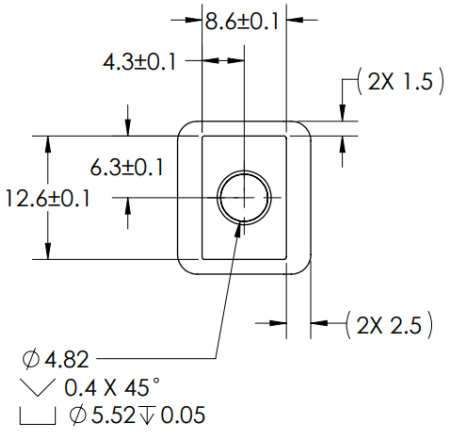

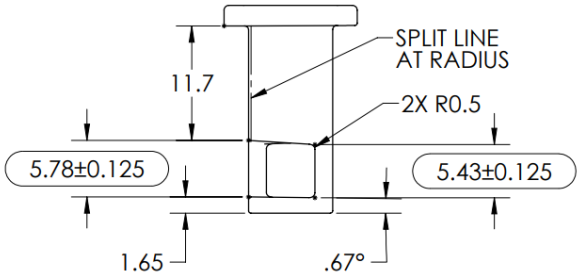

NOTES:
1. ALL FILLETS TO BE 0.25 UNLESS SPECIFIED
2. MATERIAL: ZINC - ZAMAK #5
3. PARTING LINE FLASH TO BE TRIMMED WITHIN 0.13 OF SURFACE.
4. REMOVE BURRS AND SHARP EDGES.
5. DIMENSIONS MARKED WITH OVAL ( ) ARE CRITICAL TO THE FIT OF THE NUT AT ASSEMBLY.

METRIC

PART NO. 89122253	G	REDUCED REAR HOLE DIA FOR DOGPOINT SCREW	ECO-175274	6/6/16	HDL	---
MATERIAL SEE NOTES	REV	DESCRIPTION	ECO/PDP	DATE	BY	ENG
FINISH NONE						

TOLERANCE UNLESS NOTED
ZERO PLACE X ± 1
ONE PLACE .X ± 0.5
TWO PLACE .XX ± 0.25
HOLE DIA ± 0.13
ANGLES ± 2°

SCALE NONE
DRAWN HDL
CHECKED ---
APPROVED ---
DATE 4/22/15

SolidWorks Drawing

THIRD ANGLE PROJECTION

DO NOT SCALE DRAWING

TITLE
FRAME, FASTENER

SIZE B | DRAWING NO. 89122253 | SHEET 1 OF 1